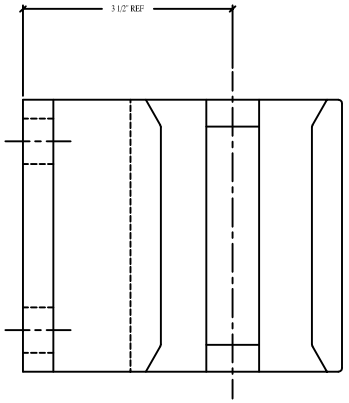

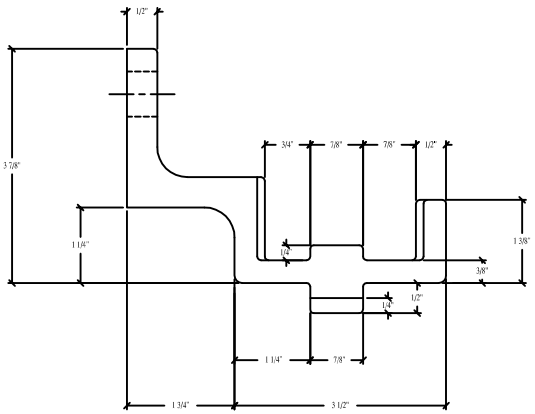

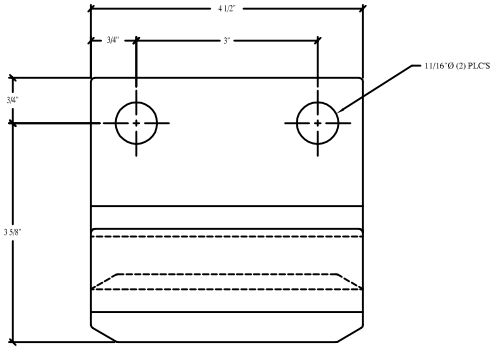

WT. = 6.21 LBS.

NO.	REVISION	BY	CH.	DATE

TOLERANCE UNLESS OTHERWISE NOTED

FRACTIONS	±1/16"
DECIMAL THOUSANDTHS	±0.005
ANGLES	±0.5°

ITEM	QTY.	PART NO.	DESCRIPTION – [QTY. LISTED IS FOR (1) PART]	MAT'L	WT.

This drawing and information contained thereon and the design are the property of INTER PARTS WAREHOUSE, Eugene, Or. and must not be traced, reproduced or used in any way detrimental to the interests of the company. It is loaned for the specific purpose intended and must be returned to the company unless written permission is obtained for retention.

PACKAGE: NUMBER | DRAWN BY: NAME
SCALE: DWG_SCALE | CHECKED BY:
DATE: MO_DAY_YR | APPROVED BY:
CLIENT
CLIENT
CITY,STATE

Northwest Dryer & Machinery

DRAWING TITLE
200-1170 Chain Guide

DRAWING NO. DRAWING_NO. | REV REV.