CAST IRON

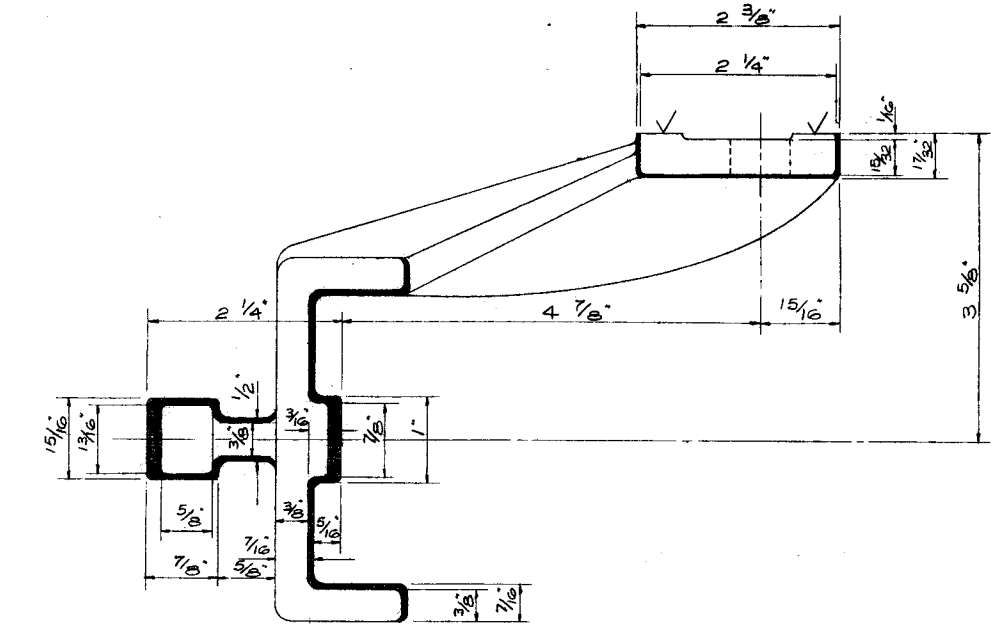

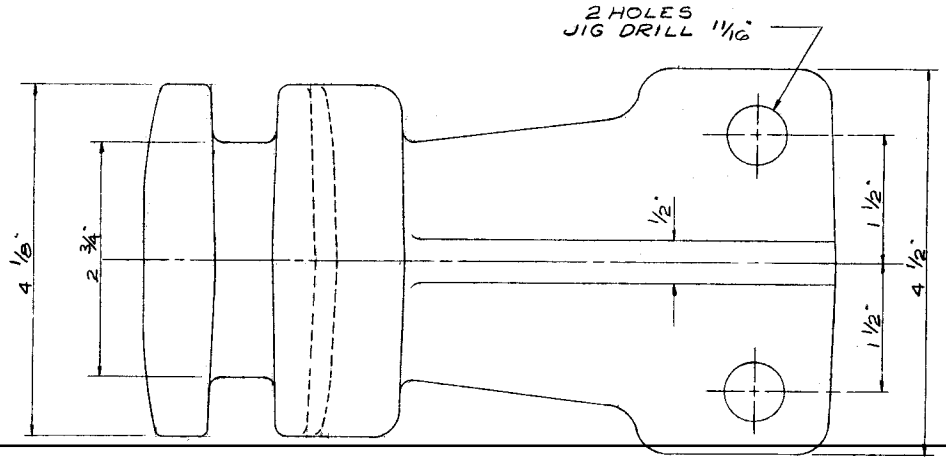

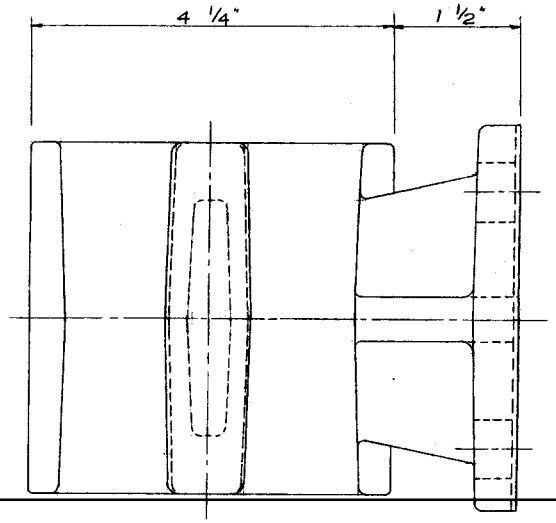

NW-31	COE CHAIN HOLDDOWN (LONG)	
NO SCALE		LCS
NORTHWEST DRYER & MACH. PORTLAND, OREGON		C-1990